# ViViD HD-20 and ViViD HD-40

## HD/SD long variable video delay

Crystal Vision

**Crystal Vision Ltd.,** Lion Technology Park, Station Road East, Whittlesford, Cambridge, CB22 4WL, England.
Tel: +44(0) 1223 497049 sales@crystalvision.tv www.crystalvision.tv

# Contents


1 Introduction 3

2 Hardware installation 5

2.1 Module configuration 5

2.2 Rear modules and signal I/O 6

Rear module connections with RM44 6

2.3 General Purpose Interface (GPI) 7

3 Card edge operation 10

3.1 Card edge switch settings 10

3.2 Card edge rotary controls 10

3.3 Reading card edge LEDs 11

3.4 Navigating card edge menus 11

3.5 Card edge configuration 12

Menu tree 12

Status menu 12

Preset menu 13

Delay menu 14

4 Using the front control panel 15

4.1 Module selected 15

Navigating the display 15

Selecting a ViViD HD-20 or ViViD HD-40 16

Updating the display 16

4.2 The ViViD HD-20/HD-40 active panel menu structure 17

Status Menu 17

Preset and factory reset menu 18

Delay Menu 20

5 Statesman 22

5.1 Statesman operation 22

Status tab 23

Delay tab 23

Configuring delay 24
Presets and factory reset 24
6 Trouble shooting 26
6.1 Card edge status LEDs 26
6.2 Control panel status 26
Basic fault finding guide 27
7 Specification 28

| | | |
|---|---|---|
| Revision 1 | General update. | 18/02/09 |
| Revision 2 | Amended to include ViViD HD-40. | 31/03/09 |
| Revision 3 | GPI selection table added to page 7. | 21/02/11 |
| Revision 4 | GPI selection table amended. Page 7. | 16/11/12 |
| Revision 5 | GPI presets control table amended. Page 7. | 10/12/12 |
| Revision 6 | Added note about removal of card edge control in 2019. Removed references to 4U frame. | 29/01/21 |

# 1 Introduction

ViViD HD-20 and ViViD HD-40 are both variable video delays able to match an extra long delay or typically used as part of a profanity delay system. The maximum delay in HD for the ViViD HD-20 is up to 21 seconds and in SD up to 119 seconds, and for the ViViD HD-40 up to 43 seconds for HD and 238 seconds for SD. The delay is adjustable in seconds, frames, lines and pixels. For both boards the output timing is based on the video input.

ViViD HD-20 and ViViD HD-40 delay not just the active picture but the entire video stream, with embedded audio and ancillary data staying with the associated video. 16 presets can be assigned and recalled through GPI, allowing different delay values to be recalled automatically.

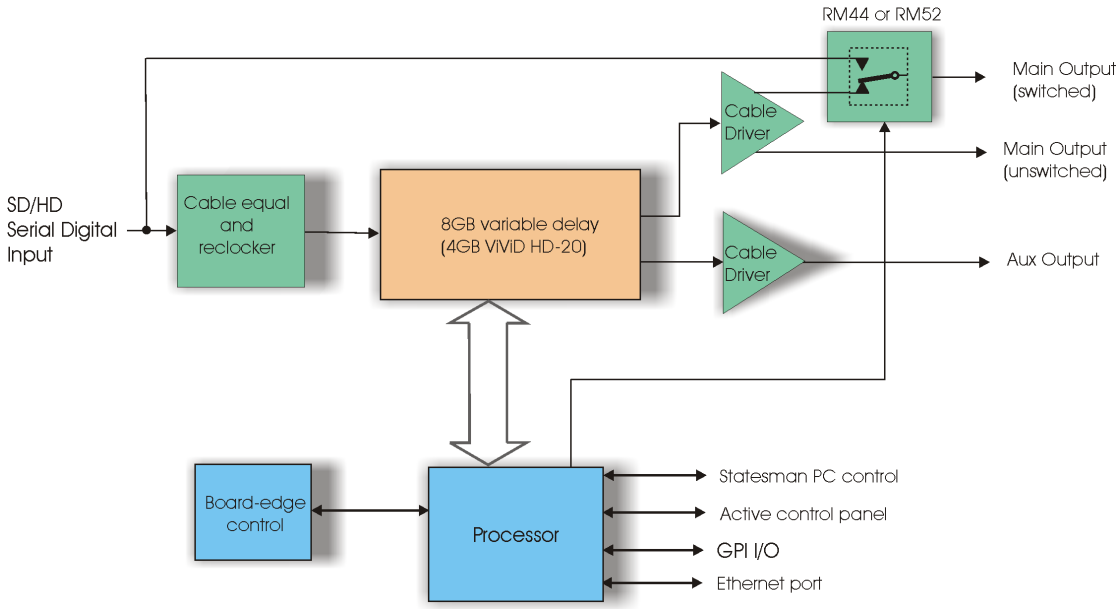


*ViViD HD-20 and ViViD HD-40 Video Delay*

The main features are as follows:

- Long variable video delay with both HD and SD.
- Passes entire data stream.
- Auto line standard selection.
- Three outputs, one with relay bypass protection.
- Maximum delay adjustable from less than 1 line (minimum through board) to 238 seconds depending on line rate, in increments of seconds, frames, lines and pixels (ViViD HD-20 approx. 21 seconds in HD to 119 seconds in SD mode. ViViD HD-40 approx 43 seconds in HD to 238 seconds in SD mode).
- Recall of 16 presets with GPI control.
- GPI output indication of serial input fail.

Both ViViD HD-20 and ViViD HD-40 are 100mm x 266mm modules, which fit in the three standard frames and can be integrated with any boards from the company's full product range. They use the RM44 frame rear module and include relay bypass protection of the input in the event of power failure or board malfunction or removal.

Flexible control options include an active front panel on the frame, a remote control panel, the Statesman PC software and the VisionWeb web browser control. Board edge control was also available prior to 2019.

Software/firmware updates can be downloaded directly to the ViViD HD-20 and HD-40, as they become available, directly to the frame rear module Ethernet connector from a suitable PC.

Applications include virtual studios where these video delays can offset the virtual set delay so the camera feed and graphics both reach the chroma keyer at the same time, and transmission where they can compensate for the delay of MPEG encoders or decoders. The ViViD HD-40 with its extra long delay capability is most suited to profanity delays or any other application where an extra long delay is required.

# 2 Hardware installation

The ViViD HD-20 and ViViD HD-40 are both single height modules using the RM44 rear connector that will fit into all Crystal Vision rack frames. All modules can be plugged in and removed while the frame is powered without damage.

## 2.1 Module configuration

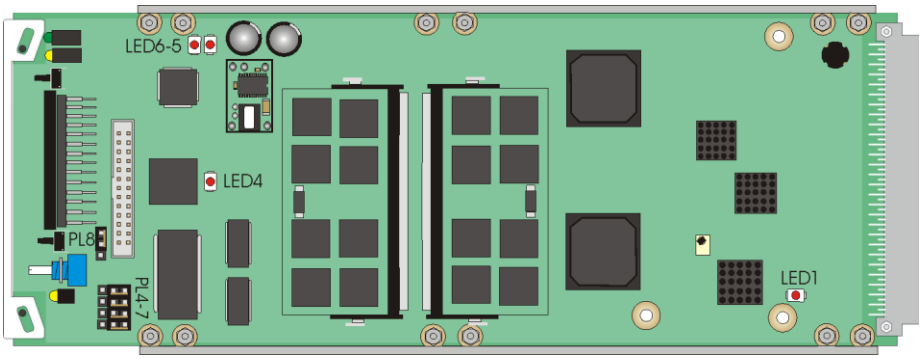


*ViViD HD-20 and ViViD HD-40*

### Link configuration and LEDs

There are five jumper links and four surface-mounted LEDs on both the ViViD HD-20 and ViViD HD-40 motherboards. The surface-mounted LEDs are not visible from the front of the frames and are included for diagnostic purposes only.

| | Comment |
|---|---|
| PL4, PL5, PL6, PL7 | GPI/RS422 comms<br>GP1 pins 2-3 (right position). RS422 pins 1-2 (lower position)<br>Factory set for GPI |
| PL8 | 1-2 selected IP address. 2-3 forced IP address 10-0-0-201 |
| PL9 (under side) | Not applicable |
| LED1 | Input present |
| LED4 | CPU configuration in progress |
| LED5 | Ethernet Data |
| LED6 | Ethernet Link |

# 2.2 Rear modules and signal I/O

The Indigo 2 2U frames will house up to 12 single height modules and dual power supplies. The Indigo 1 1U frames will house six single height modules and a single power supply. The Indigo 1-DP 1U frame with power supply redundancy include two fixed power supplies and can hold up to six single height modules. The Indigo DT desk top boxes have a built-in power supply and will house up to two single height modules.

**Note:** For details of fitting rear connectors please refer to the appropriate frame manual.

## Rear module connections with RM44

The RM44 is a single height module that will allow maximum packing density with the maximum number of outputs available.

| RM44 rear module connector | Description |
|---|---|
| | **RM44**<br>• 12 ViViD HD-20/40 modules per Indigo 2 frame<br>• Six per Indigo 1 frame<br>• 2 per Indigo DT<br>• All frame slots can be used |

| BNC | I/O assignment |
|---|---|
| **Ethernet connector** | Available for software/firmware updates |
| **AUX OUT** | Serial digital output with no relay bypass |
| **MAIN OUT2 (Unswitched)** | Serial digital output with no relay bypass |
| **MAIN OUT1 (Switched)** | Serial digital output with relay bypass |
| **HD/SD IN** | High Definition/Standard Definition serial digital input |

## 2.3 General Purpose Interface (GPI)

Each frame slot has up to six connections ‘a-f ‘for GPI control and monitoring. These connections are available at the rear of the frame on the 26-way D-Type remote connectors.

| GPI | | | Low (<1V) | High (+5V) |
|---|---|---|---|---|
| **0** | **‘a’** | **Recall preset bit 1** | The 16 user preset configurations can be recalled using binary notation | |
| **1** | **‘b’** | **Recall preset bit 2** | | |
| **2** | **‘c’** | **Recall preset bit 4** | | |
| **3** | **‘d’** | **Recall preset bit 8** | | |
| **4** | **‘e’** | **Loss of input** | Input missing | Input present |
| **5** | **‘f’** | **No connection** | | |

As supplied, each GPI output has a 220Ω resistor in series with its output. This allows for an external LED to be driven, connected to a DC voltage of +5V.

The recall presets with GPI control must be enabled from the user controls, i.e. card edge, active front panel or Statesman PC control system.

The 16 user preset configurations can be recalled using reverse-binary notation.

| GPI / Preset | Bit 4 | Bit 3 | Bit 2 | Bit 1 |
|---|---|---|---|---|
| **1** | 1 | 1 | 1 | 1 |
| **2** | 1 | 1 | 1 | 0 |
| **3** | 1 | 1 | 0 | 1 |
| **4** | 1 | 1 | 0 | 0 |
| **5** | 1 | 0 | 1 | 1 |
| **6** | 1 | 0 | 1 | 0 |
| **7** | 1 | 0 | 0 | 1 |
| **8** | 1 | 0 | 0 | 0 |
| **9** | 0 | 1 | 1 | 1 |
| **10** | 0 | 1 | 1 | 0 |
| **11** | 0 | 1 | 0 | 1 |
| **12** | 0 | 1 | 0 | 0 |
| **13** | 0 | 0 | 1 | 1 |
| **14** | 0 | 0 | 1 | 0 |
| **15** | 0 | 0 | 0 | 1 |
| **16** | 0 | 0 | 0 | 0 |

## 2U frame GPI connections

GPI lines ‘a’ to ‘f’ of each card connect to one of four rear remote connectors as follows:

| Slot no. | ‘a’ pin | ‘b’ pin | ‘c’ pin | ‘d’ pin | ‘e’ pin | ‘f’ pin |
|---|---|---|---|---|---|---|
| **1** | 8 (1) | 9 (1) | 18 (1) | 26 (1) | 19 (2) | 20 (2) |
| **2** | 7 (1) | 16 (1) | 17 (1) | 25 (1) | 10 (2) | 11 (2) |
| **3** | 8 (3) | 9 (3) | 18 (3) | 26 (3) | 19 (4) | 20 (4) |
| **4** | 7 (3) | 16 (3) | 17 (3) | 25 (3) | 10 (4) | 11 (4) |
| **5** | 5 (1) | 6 (1) | 15 (1) | 24 (1) | 1 (2) | 2 (2) |
| **6** | 4 (1) | 14 (1) | 13 (1) | 23 (1) | 3 (2) | 4 (2) |
| **7** | 5 (3) | 6 (3) | 15 (3) | 24 (3) | 1 (4) | 2 (4) |
| **8** | 4 (3) | 14 (3) | 13 (3) | 23 (3) | 3 (4) | 4 (4) |
| **9** | 3 (1) | 12 (1) | 22 (1) | 21 (1) | 12 (2) | 13 (2) |
| **10** | 10 (1) | 11 (1) | 19 (1) | 20 (1) | 21 (2) | 22 (2) |
| **11** | 3 (3) | 12 (3) | 22 (3) | 21 (3) | 12 (4) | 13 (4) |
| **12** | 10 (3) | 11 (3) | 19 (3) | 20 (3) | 21 (4) | 22 (4) |

*Table shows pin number (remote number)*

**Note:** Remote 1 and Remote 3 are 26 way high-density D-Type female sockets. Frame ground is pin 2 and +5V @500mA is pin 1 in each case.

Remote 2 and Remote 4 are 26 way high-density D-Type male plugs and frame ground is pin 6 in each case and +5V @500mA is pin 15 on Remote 2.

Note. The +5V output is protected by self-resetting thermal fuses, which limit the total output current available from Remotes 1-4 to approximately 1A.

## 1U frame GPI connections

GPI lines ‘a’ to ‘f’ of each card connect to one of two rear remote connectors as follows:

| Slot no. | ‘a’ pin | ‘b’ pin | ‘c’ pin | ‘d’ pin | ‘e’ pin | ‘f’ pin |
|---|---|---|---|---|---|---|
| **1** | 8 (1) | 9 (1) | 18 (1) | 26 (1) | 19 (2) | 20 (2) |
| **2** | 7 (1) | 16 (1) | 17 (1) | 25 (1) | 10 (2) | 11 (2) |
| **3** | 5 (1) | 6 (1) | 15 (1) | 24 (1) | 1 (2) | 2 (2) |
| **4** | 4 (1) | 14 (1) | 13 (1) | 23 (1) | 3 (2) | 4 (2) |
| **5** | 3 (1) | 12 (1) | 22 (1) | 21 (1) | 12 (2) | 13 (2) |
| **6** | 10 (1) | 11 (1) | 19 (1) | 20 (1) | 21 (2) | 22 (2) |

*Table shows pin number (remote number)*

**Note:** Remote 1: 26 way high-density D-Type female socket. Frame ground is pin 2 and +5V @500mA is pin 1.

Remote 2: 26 way high-density D-Type male plugs and frame ground is pin 6 and +5V @500mA is pin 15

Note. The +5V output is protected by self-resetting thermal fuses, which limit the total output current available from Remotes 1-2 to approximately 1A.

## Indigo DT desk top box GPI connections

GPI lines ‘a’ to ‘f’ of each card connect to the rear remote connector as follows:

| Slot no. | ‘a’ pin | ‘b’ pin | ‘c’ pin | ‘d’ pin | ‘e’ pin | ‘f’ pin |
|---|---|---|---|---|---|---|
| **1** | 8 (1) | 9 (1) | 18 (1) | 26 (1) | 19 (2) | 20 (2) |
| **2** | 7 (1) | 16 (1) | 17 (1) | 25 (1) | 10 (2) | 11 (2) |

*Table shows pin number (remote number)*

**Note:** Remote 1: 26 way high-density D-Type female socket. Frame ground is pin 2 and +5V @500mA is pin 1.

Remote 2: 26 way high-density D-Type male plugs and frame ground is pin 6 and +5V @500mA is pin 15

Note. The +5V output is protected by self-resetting thermal fuses, which limit the total output current available from Remotes 1-2 to approximately 1A.

# 3 Card edge operation

Once the start-up initialisation procedure is complete, the ViViD HD-20 and ViViD HD-40 cards can be controlled or configured from the card edge, the active control panel or the Statesman PC interface. This chapter will concentrate on the card edge controls.

The front edge of the card provides power rail monitoring, menu selection, delay assignment and a ten-digit visual status display.

*Board edge control was removed from ViViD HD-20/40 in 2019. Therefore the card edge control information detailed here is only relevant for older versions of the product.*

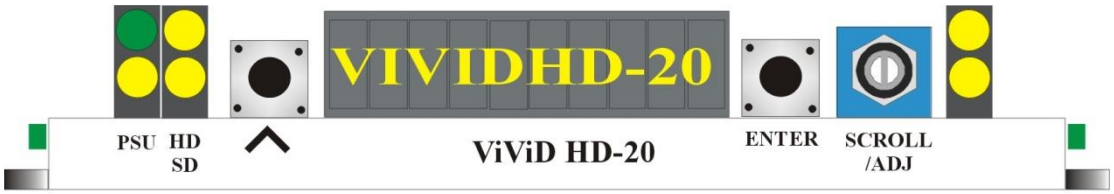


*ViViD HD-20 front edge view*

**Note:** ViViD HD-20 shown. The ViViD HD-40 is identical in appearance.

## 3.1 Card edge switch settings

The two tactile push button switches allow the operator to navigate within the menu structure.

| Button | Function | Normal state Up, Action Down |
|---|---|---|
| ^ | Up Menu | Push to jump up a menu level or cancel a selection |
| ENTER | Select/Action | Push to select a menu and to action and confirm a change |

## 3.2 Card edge rotary controls

The board edge rotary encoder is used to navigate through the menu categories and adjust parameter values.

| Control | Function |
|---|---|
| SCROLL /ADJUST | Rotate SCROLL to identify a menu category. In combination with the ENTER button select and ADJUST to change the current level or select a further option. |

**Note:** The rotary control can access menus and parameter values by clockwise or anti-clockwise rotation.

## 3.3 Reading card edge LEDs

Card edge LEDs may be used in conjunction with status information from any connected remote status panel display or from Statesman if available.

Refer also to the trouble shooting chapter for more help with solving problems and monitoring status information.

The following table summarises the card edge LED functions and colours:

| Name | LED Colour | Function when ON | Function when Off |
|---|---|---|---|
| **HD** | Yellow | Video input standard is HD (High Definition) | Input not present |
| **SD** | Yellow | Video input standard is SD (Standard Definition) | |
| **PSU** | Green | Good power supply (PSU) rails | One or more of the monitor supplies is out of specification |
| | Yellow | No current function | |
| | Yellow | No current function | |
| | Yellow | No current function | |

## 3.4 Navigating card edge menus

To access the card edge menu system proceed as follows:

- Press the up-arrow [∧] until a top menu category is reached
- Rotate the SCROLL control until the desired menu category is found
- Press ENTER to enter the sub menus of that category
- Rotate SCROLL to select a sub menu
- Press ENTER to select the desired function. Selection will be indicated by the text being displayed in ***italic*** text
- Rotate ADJUST to make the desired change to the selected parameter. The display brightness will flash slowly to indicate that a change has been made and requires confirmation
- Press ENTER to action the change. The display will cease flashing
- Use the up-arrow [∧] and SCROLL control to navigate to further menus

**Notes:** The displayed menu brightness will flash slowly if confirmation of a change is required.

# 3.5 Card edge configuration

## Menu tree

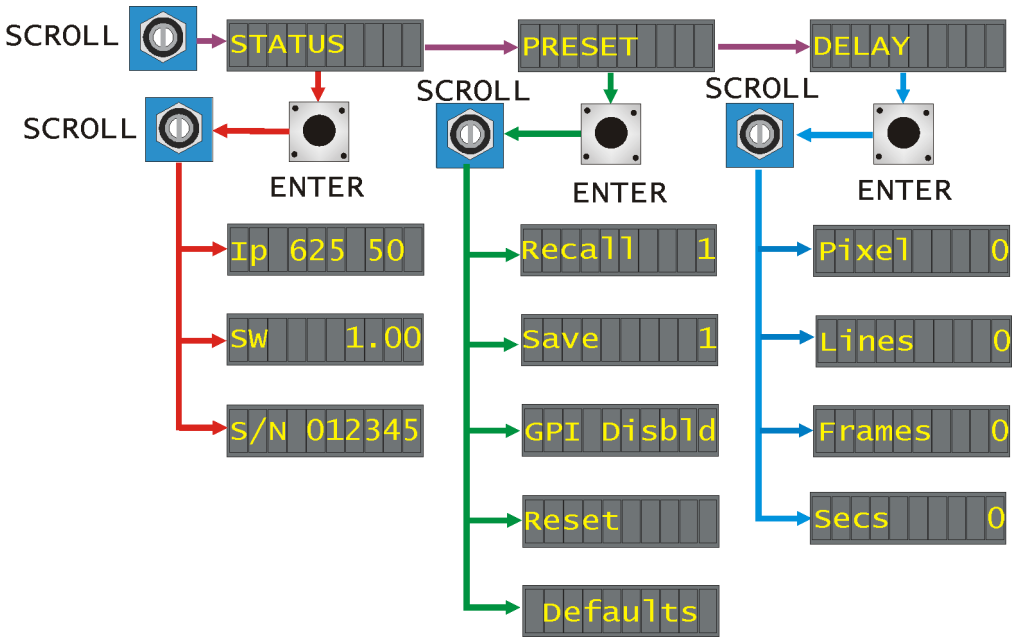


*Board edge menu structure*

Tip: To reach the top menu push the ∧ button repeatedly until a top menu is reached. Rotate the SCROLL control anti-clockwise until the STATUS menu appears.

## Status menu

From the STATUS top menu press ENTER then SCROLL to access the status menu options.

| STATUS | Menu | Comment |
|---|---|---|
| Ip 625 50 | Input/Output line Standard | Rotate the SCROLL/ADJ control to show the status menu.<br>Press ENTER and rotate SCROLL/ADJ to show the input status.<br>The Input video line standard will be shown.<br>***Ip 525 59, Ip 625 50 Ip 1080i50, Ip 1080i59, Ip 720p50, Ip 720p59, Not Known.*** |
| SW 1.00 | Software version fitted | Rotate SCROLL/ADJ to show the version number of the currently installed software. |
| S/N 012345 | PCB serial number | Rotate SCROLL/ADJ to show the electronically stored PCB serial number. This should correspond with the serial number label affixed to the PCB connector. |

## Preset menu

Up to 16 preset delays may be stored for the board and recalled either from the board control, active front panel, Statesman or through the use of external GPIs. The presets are numbered 1-16. The factory reset and defaults controls are also to be found in this menu.

**Note:** Care should be taken when storing presets that the desired configuration is not changed by any external input prior to saving.

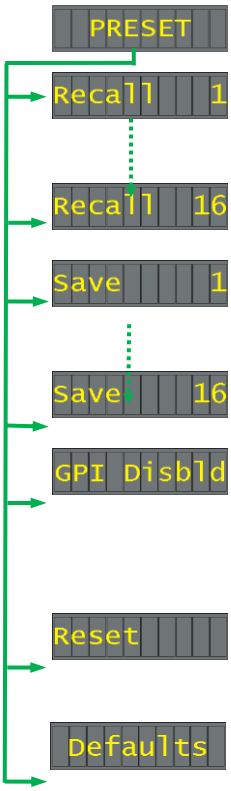


| Menu | Comment |
|---|---|
| Recall Presets 1-16 | Rotate the SCROLL/ADJ control to show the Preset Menu.<br>Press ENTER and rotate SCROLL/ADJ to select Recall.<br>Press ENTER and rotate SCROLL/ADJ to select Recall location.<br>Press ENTER to make a recall.<br>***Recall xx.*** |
| Save Presets 1-16 | Rotate the SCROLL/ADJ control to show the Save menu.<br>Press ENTER and rotate SCROLL/ADJ to select Save location.<br>Press ENTER to make a save.<br>***Save xx.*** |
| Enable GPI control of presets | Rotate SCROLL/ADJ to select GPI status.<br>Press ENTER and rotate SCROLL/ADJ to select.<br>Selecting ENABLE allows the recall of previously saved user configurations via GPI inputs 0-3.<br>***GPI Enable, GPI Disable.*** |
| | Rotate SCROLL/ADJ to select Factory Reset.<br>Press ENTER to select and rotate SCROLL/ADJ to select.<br>Indication is given that the card is being reset. ***Reset Done.*** |
| | Rotate SCROLL/ADJ to select Defaults.<br>Press ENTER to select and rotate SCROLL/ADJ to select.<br>Indication is given that the card is being reset. ***Reset Done.*** |

## Reset (factory defaults)

The Reset button will return all parameters to their factory default levels.

**Note:** Reset will cause all user-stored configurations to be erased. To retain user stored configurations use the Defaults option.

| Parameter | Default value |
|---|---|
| **Delay** | All delays set to zero |
| **Presets** | 1 |
| **GPI enable** | Disabled |

## Delay menu

From this menu the delay is controlled. The maximum and minimum delay will be determined by the input video line rate.

| | Menu | Comment |
|---|---|---|
| DELAY | | |
| Pixel 0 | Video delay in pixels | Rotate the SCROLL/ADJ control to show the delay in pixels menu. Press ENTER and rotate Adj. to set the delay in pixels. ***Pixel xxxx.*** |
| Lines 0 | Video delay in lines | Rotate the SCROLL/ADJ control to show the delay in lines menu. Press ENTER and rotate Adj. to set the delay in lines. ***Lines xxxx.*** |
| Frames 0 | Video delay in frames | Rotate the SCROLL/ADJ control to show the delay in frames menu. Press ENTER and rotate Adj. to set the delay in frames. ***Frames xx*** |
| Secs 0 | Video delay in seconds | Rotate the SCROLL/ADJ control to show the delay in seconds menu. Press ENTER and rotate Adj. to set the delay in seconds. ***Secs xxx.*** |

The ADJUST shaft encoder changes the assigned parameter in each active menu.

The video delay through the ViViD HD-20 and ViViD HD-40 can be adjusted from the maximum delay in seconds down to a few tens of pixels. The minimum and maximum delay through the ViViD HD-20 and ViViD HD-40 will be dependent on the video format. The following table lists the maximum delays for the different video formats.

| Format | ViViD HD-20 Maximum delay seconds | ViViD HD-40 Maximum delay seconds |
|---|---|---|
| **1920x1080/50/2:1** | 21 | 43 |
| **1920x1080/59.94/2:1** | 21 | 43 |
| **1280x720/50/1:1** | 21 | 43 |
| **1280x720/59.94/1:1** | 21 | 43 |
| **625/50/2:1** | 119 | 238 |
| **525/59.94/2:1** | 119 | 238 |

Adjustment is made by selecting the required pixels, lines, frames or seconds then rotating the ADJUST rotary control. A clockwise rotation will increase the delay, anti-clockwise will decrease the delay.

If the adjustment exceeds the maximum allowed value – for example, the number of pixels – the value displayed will be reset to zero and the next higher value delay menu will be increased by one value. In this case the number of lines will be increased by one. This works for all menus, except for the seconds menu.

In the same way, if an attempt is made to go below zero – for example, in the lines menu – one will be subtracted from the lower value delay menu, in this case the number of pixels. This works for all menus, except for the Pixel menu. It is not possible to reduce the total delay of the module below the minimum number of pixels for a given input format.

# 4 Using the front control panel

## 4.1 Module selected

This operational guide assumes that the panel has been set up according to the panel setup procedure described in the Crystal Vision Control Panel manual.

**Note:** It is **ESSENTIAL** that the panel set up procedure is followed and any old or unknown passwords cleared prior to using the panel for the first time.

At power up all eight control panel keys LEDs will illuminate briefly. Once the panel has completed its power up and configuration sequence the panel will enter Statesman mode and the message 'Press Cal to Exit' will be displayed.

*Statesman mode is entered by default*

To continue with control panel operation or configuration, press the CAL key once. A second press of the CAL key will return to Statesman control.

The control panel will display the name of the card that first responds to the polling request together with its location number.

The location number consists of the frame number plus the card position in the frame.

### Navigating the display

The functions assigned to control panel keys are:

- DEVICE – enters Device menu to select a card or show cards available/enters panel set up when held down during power up/shows frame status when pressed from Statesman mode
- CAL – enters or leaves Statesman mode/enters panel diagnostics mode when held down during power up/updates the display
- Asterisk – enters board rename menu from the Device menu
- F1 to F4 – soft keys, function assigned within each menu
- HOME – moves the display to the home menu
- ENTER – accept current selection
- Upward arrow – used to move up the menu structure / enter lock panel menu from the Device menu

- Rotary control – shaft encoder used to select options or variable data

**Note:** Please refer to the Crystal Vision Control Panel manual for details of the Panel Setup, Lock Panel and Diagnostic menus.

## Selecting a ViViD HD-20 or ViViD HD-40

To select a particular card in a frame, press the DEVICE key to go to the Device menu.

**Note:** There may be a delay whilst the frame is interrogated during which time the 'No cards Found' could be displayed.

The top line of the display will show 'Available Cards X', where X is the number of cards that have responded so far to the polling request.

*The available cards menu*

Rotate the shaft encoder and the bottom row will display the successfully polled cards by name and location or slot number.

In the example above, the card displayed is located in the first frame in slot number 1.

When the desired card is selected press the ENTER key to access that card's HOME menu. The message shows that a ViViD HD-20 has been selected.

*The ViViD HD-20 home menu*

**Note:** ViViD HD-20 shown for simplicity.

## Updating the display

The values displayed on an active front panel are only updated when an adjustment is made and when changing menu level. If changes occur through the use of card edge controls or other remote control, the text displayed on the active front panel will not be updated immediately. If necessary, use the upward arrow to leave and then re-enter a menu to update the display.

# 4.2 The ViViD HD-20/HD-40 active panel menu structure

At any time the main top-level menu (Home) is obtained by pressing the HOME key. From the home menu further selections can be made. Active function keys are indicated by illuminated, integrated LEDs.

The main top-level menus for the ViViD HD-20 and ViViD HD-40 are obtained by pressing the F1- F4 keys from the HOME menu. Menu keys are illuminated when active and when further menus are available.

The top-level menus are:

- Status – Press F1
- Presets (User presets and factory reset) – Press F2
- Delay (Delay in pixels, lines, frames and seconds) – Press F3

When a sub menu has been selected, further options may be obtained by using the Shaft control to scroll through them. Once the desired option has been located a selection or value change can be made by either toggling the appropriate function key or by selecting and using the shaft control to alter a numerical value. A configuration change or value will be activated as the shaft control is rotated or function button is toggled. The variable being adjusted will appear in brackets. If the variable updates in real time it will be contained within square brackets [letter box] or if the change requires to be accepted angular brackets will be used <CVBS>. Pressing Enter will fix the new value.

The following chart shows the available ViViD HD-20 menu (the ViViD HD-40 is identical). The actual menus available may vary slightly as software is updated.

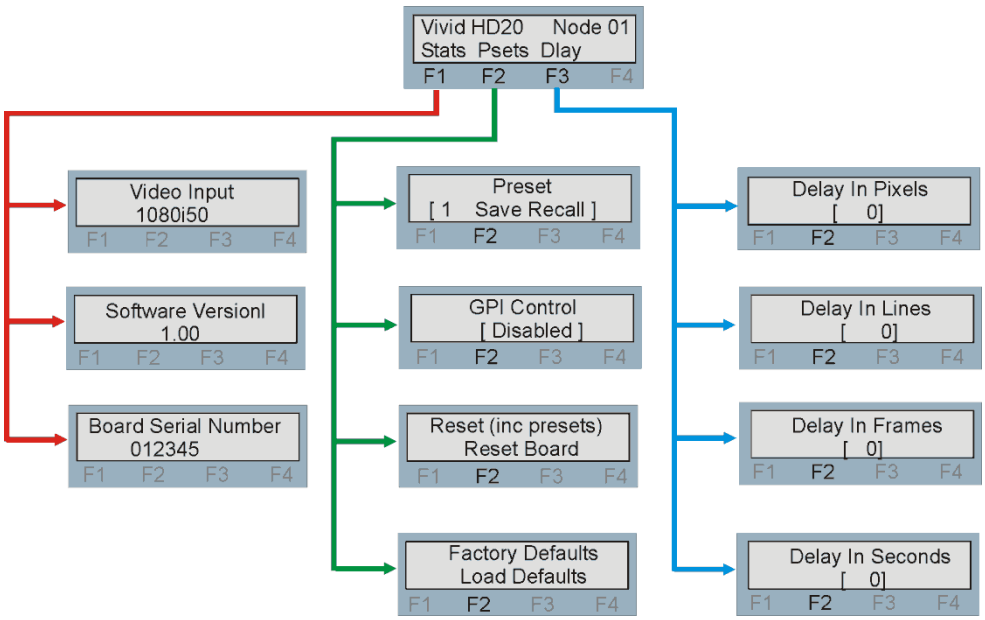


*The ViViD HD-20 menu tree*

**Note:** Function key LEDs are illuminated when active.

## Status Menu

The status menu contains useful information about the board and its video input.

| ViViD HD-20/HD-40 status menu | Description |
|---|---|
| 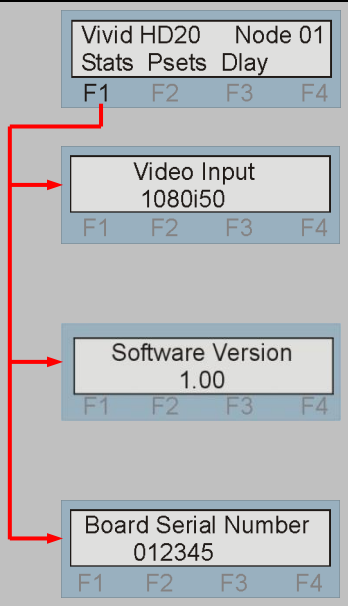 | From the Home menu, press F1 to select the status menu, which is then traversed by rotating the shaft control.<br><br>Rotate shaft encoder to select video input status. ***NTSC, PAL, 720p 50, 720p 59.94, 1080i 50, 1080i59.94, Not Supported, Missing.***<br><br>Rotate the shaft control to view the currently fitted software version.<br><br>Rotate the shaft control to view the electronically stored board serial number. |

## Preset and factory reset menu

Up to 16 set-ups may be stored for the board and recalled either from the board control, active front panel, Statesman or through the use of external GPIs. The presets will store board setup data including operating mode and board configuration. The presets are numbered 1-16.

The GPI lines used to recall user saved presets can be disabled to prevent being inadvertently triggered whilst under active control by Statesman or a front panel.

**Note:** Care should be taken when storing presets that the desired configuration is not changed by any external input prior to saving.

There are two menus giving access to the factory reset and factory defaults controls that can be used to return all user controlled variables to their factory default values. When selecting to reset the user will be asked to confirm this action.

**Note:** All user-stored configurations will be erased during a full factory reset. To save stored values use the defaults option.

| ViViD HD-20/HD-40 preset menu | Description |
|---|---|
| 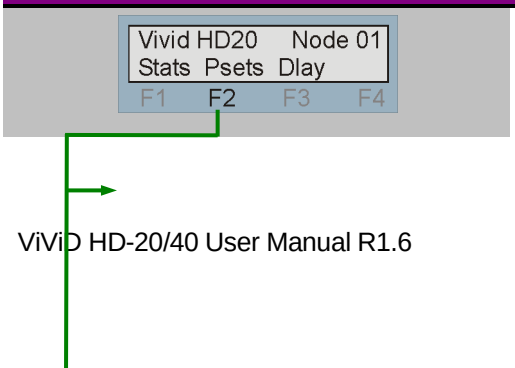 | From the Home menu, press F2 to select the Preset menu, which is then traversed by rotating the shaft control. |

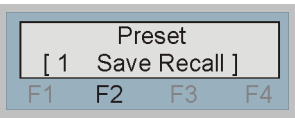


Rotate shaft encoder to select Presets.
Press F2 to initiate selection.
Rotate shaft encoder to select the preset location.
Press F3 to save current configuration.
Press F4 to recall stored configuration.

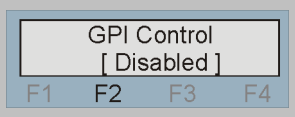


Rotate shaft encoder to select GPI Control.
Press F2 to select to change selection.
Rotate shaft encoder to select enable or disable.
Press enter to accept the new selection.

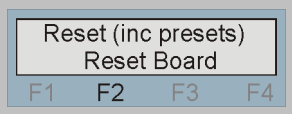


Rotate shaft encoder to select Reset.
Press F2 ***Are you sure? Y (F3)***.
Press F3 to implement a factory reset.
Note. User stored configurations will be erased.

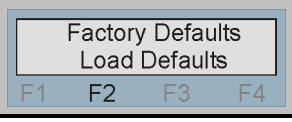


Rotate shaft encoder to select Defaults.
Press F2 ***Are you sure? Y (F3)***.
Press F3 to set to factory defaults.

| Parameter | Default value |
|---|---|
| **Delay in pixels** | 0 |
| **Delay in lines** | 0 |
| **Delay in frames** | 0 |
| **Delay in seconds** | 0 |
| **Preset selection** | As previously selected |
| **GPI control** | Disabled |

## Delay Menu

From this menu adjustment of the picture delay can be made.

| ViViD HD-20/HD-40 delay menu | Description |
|---|---|
| 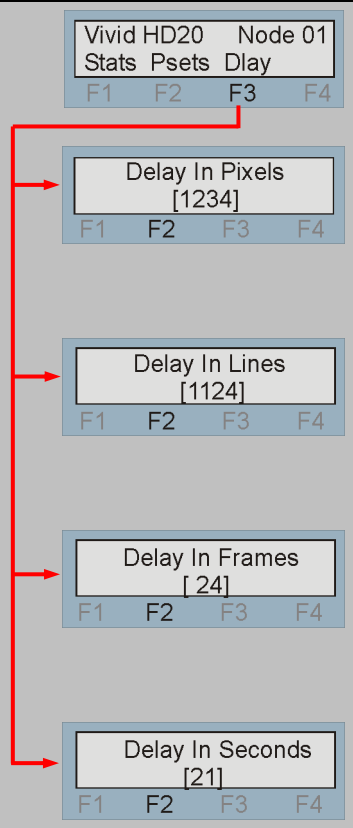 | From the Home menu, press F1 to select the Delay menu, which is then traversed by rotating the shaft control.<br><br>Rotate shaft encoder to select Delay in pixels.<br>Press F2 to select to change the value.<br>Rotate shaft encoder to set the new value.<br>***See table for range.***<br>Press enter to accept the new value.<br><br>Rotate shaft encoder to select Delay in lines.<br>Press F2 to select to change the value.<br>Rotate shaft encoder to set the new value.<br>***See table for range.***<br>Press enter to accept the new value.<br><br>Rotate shaft encoder to select Delay in frames.<br>Press F2 to select to change the value.<br>Rotate shaft encoder to set the new value.<br>***See table for range.***<br>Press enter to accept the new value.<br><br>Rotate shaft encoder to select Delay in seconds.<br>Press F2 to select to change the value.<br>Rotate shaft encoder to set the new value.<br>***See table for range.***<br>Press enter to accept the new value. |

The video delay through the ViViD HD-20 and the ViViD HD-40 can be adjusted from several seconds down to a few tens of pixels. The minimum and maximum delay through both the ViViD HD-20 and ViViD HD-40 will be dependent on the video format.

The following table lists the maximum delays for the different video formats.

| Format | ViViD HD-20 Maximum delay seconds | ViViD HD-40 Maximum delay seconds |
|---|---|---|
| **1920x1080/50/2:1** | 21 | 43 |
| **1920x1080/59.94/2:1** | 21 | 43 |
| **1280x720/50/1:1** | 21 | 43 |
| **1280x720/59.94/1:1** | 21 | 43 |
| **625/50/2:1** | 119 | 238 |
| **525/59.94/2:1** | 119 | 238 |

Adjustment is made by selecting the required pixels, lines, frames or seconds then rotating the shaft rotary control. A clockwise rotation will increase the delay, anti-clockwise will decrease the delay.

If the adjustment exceeds the maximum allowed value – for example, the number of pixels – the value displayed will be reset to zero and the next higher value delay menu will be increased by one value. In this case the number of lines will be increased by one. This works for all menus, except for the seconds menu.

In the same way, if an attempt is made to go below zero – for example, in the lines menu – one will be subtracted from the lower value delay menu, in this case the number of pixels. This works for all menus, except for the Pixel menu. It is not possible to reduce the total delay of the module below the minimum number of pixels for a given input format.

# 5 Statesman

The Crystal Vision Statesman PC control software is designed to control a range of Crystal Vision modules via serial control from a PC. Statesman provides a user friendly means of configuring and operating Crystal Vision modules with the benefit of see-at-a-glance status monitoring.

The main Statesman application communicates with each module in a frame through a Statesman capable or active control panel. An active panel or REMIND-E remote control panel must be fitted to allow Statesman control.

*Please note that Statesman has now been replaced by the VisionWeb web browser control.*

## 5.1 Statesman operation

The initial view will show an Explorer style view of the connected frames and modules. Double clicking on a module will enable the display of the main application menus.

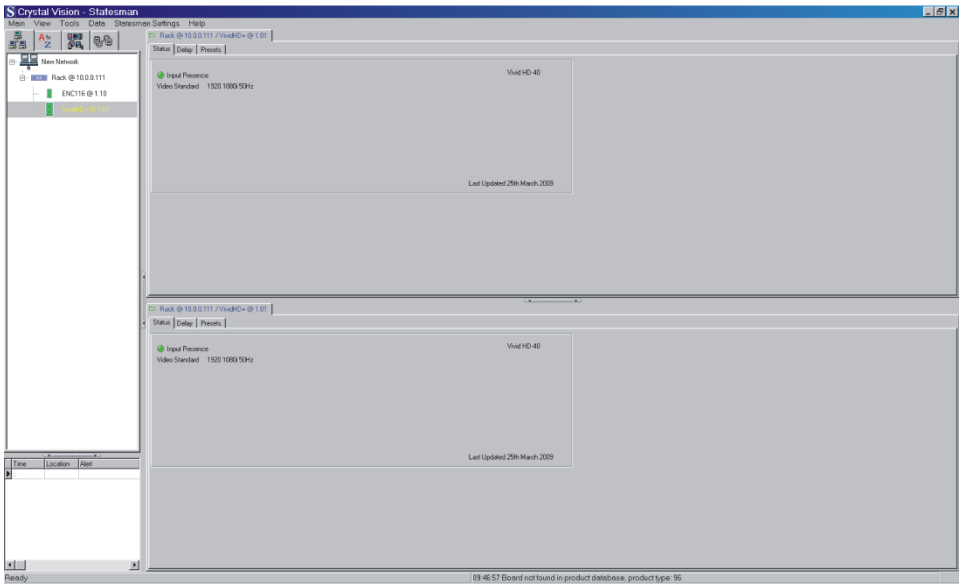


*Statesman main application window*

The two large control panes shown in the upper and lower halves of the window may display different menus for the same card, or controls for different cards. Click on the horizontal button-bar between the two panes to close the lower pane or drag the button to vary the size of the panes.

**Note:** For further details of Statesman configuration and operation please refer to the Statesman manual.

## Status tab

This pane gives a quick overview of the ViViD HD-20 or ViViD HD-40 input status. The presence of input video is indicated by simulated LEDs. Green will indicate a signal presence. The absence of an input will cause the LED to show red. The video standard and line rate is also given.

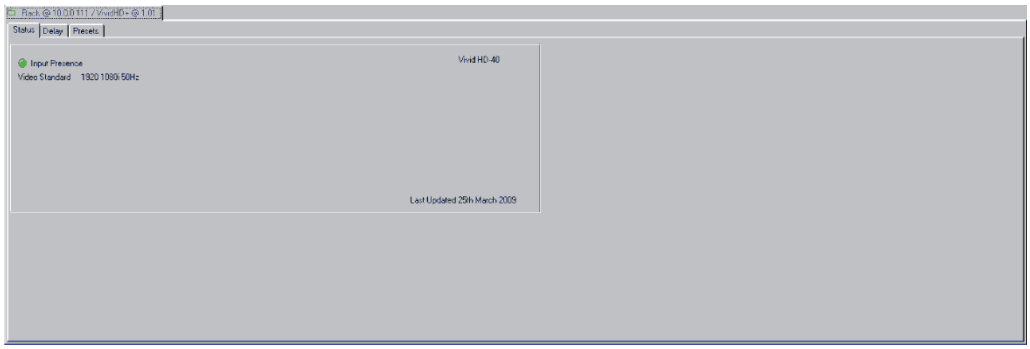


*ViViD HD-20 and ViViD HD-40 Status tab*

## Delay tab

This pane contains the controls for setting the picture delay using the pixel, line, frame and seconds delay sliders.

*ViViD HD-20 and ViViD HD-40 Delay tab*

## Configuring delay

The four sliders labelled delay in pixels, delay in lines, delay in frames and delay in seconds may be adjusted to obtain a video delay between a minimum and maximum determined by the input video format.

The maximum delay for the different input formats is as follows.

| Format | ViViD HD-20 Maximum delay seconds | ViViD HD-40 Maximum delay seconds |
|---|---|---|
| **1920x1080/50/2:1** | 21 | 43 |
| **1920x1080/59.94/2:1** | 21 | 43 |
| **1280x720/50/1:1** | 21 | 43 |
| **1280x720/59.94/1:1** | 21 | 43 |
| **625/50/2:1** | 119 | 238 |
| **525/59.94/2:1** | 119 | 238 |

The variable assigned is always shown in the top line of the slider display. It is not possible to assign a delay beyond the range dictated by the input video format even if a slider shows a greater range. If a value less than the minimum or greater than the maximum is assigned, the slider will automatically jump to the minimum or maximum for that format.

### Resetting delay

Press the CAL buttons to assign the minimum delay value for each associated delay variable.

## Presets and factory reset

There are 16 preset locations available where board configurations may be saved for future use.

*ViViD HD-20 and ViViD HD-40 Preset and Recall menu*

To store a current configuration select the location by checking the radio button 1-16. Once a location has been selected the configuration is stored by pressing the Store button.

To recall a previously stored configuration simply check the radio button for the location where the configuration is held and press the Recall button.

Previously stored configurations may also be recalled by grounding the GPI lines 1-4.

Checking the GPI Enable box enables this function. Conversely leaving it unchecked will disable GPI recall, to prevent it being inadvertently triggered whilst under active control by Statesman or a front panel.

**Note:** Care should be taken when storing presets that the desired configuration is not changed by any external input prior to saving.

The factory reset and set defaults controls can be used to return all user controlled variables to their factory default values. When selecting to reset the user will be asked to confirm this action.

**Note:** All user-stored configurations will be erased during a full factory reset. To save stored values use the defaults option.

| Parameter | Default value |
|---|---|
| **Delay in pixels** | 0 |
| **Delay in lines** | 0 |
| **Delay in frames** | 0 |
| **Delay in seconds** | 0 |
| **Preset selection** | As previously selected |
| **GPI control** | Disabled |

# 6 Trouble shooting

Trouble shooting may be performed by using the card edge or remote status panel display.

## 6.1 Card edge status LEDs

Board edge LEDs provide status reporting and may be useful when fault finding.

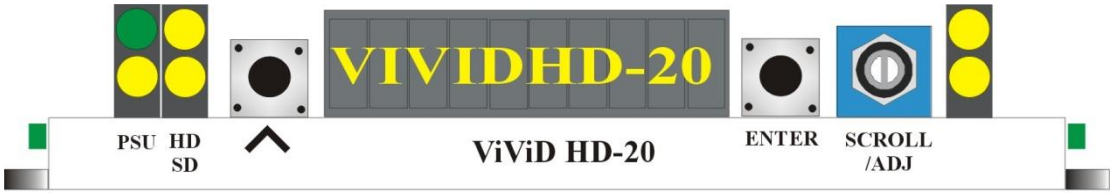


**Note:** ViViD HD-20 shown. The ViViD HD-40 is identical in appearance.

The following table summarises the card edge LED functions and colours:

| Name | LED Colour | Function when ON | Function when Off |
|---|---|---|---|
| **HD** | Yellow | Video input standard is HD (High Definition) | Input not present |
| **SD** | Yellow | Video input standard is SD (Standard Definition) | Input not present |
| **PSU** | Green | Good power supply (PSU) rails | One or more of the monitor supplies is out of specification |
| | Yellow | No current function | |
| | Yellow | No current function | |
| | Yellow | No current function | |

*Board edge control was removed from ViViD HD-20/40 in 2019. Therefore the card edge control information is only relevant for older versions of the product.*

## 6.2 Control panel status

The input status is also shown in the STATS menu of the active control panel.

| Status menu | Description |
|---|---|
| Video Input<br>1080i50<br>F1 F2 F3 F4 | ***NTSC, PAL, 720p 50, 720p 59.94, 1080i 50, 1080i59.94, Not Supported, Missing.*** |

**Note:** The Status menu will not change if the input status changes whilst the status display is shown. To refresh the status display, press the 'CAL' button.

# Basic fault finding guide

**The Power OK LED is not illuminated**

Check that the frame PSU is functioning – refer to the appropriate frame manual for detailed information

**There is no video output**

Check that a valid SD/HD signal is present and that any cabling is intact

**The video output exhibits jitter**

Check that the input signal stability is within normal limits and that the maximum cable length has not been exceeded

**The card no longer responds to card edge or front panel control**

Check that the card is seated correctly and that the Power OK LED is lit

Check any active control panel cabling

Check if the control panel can control another card in the same rack

If necessary re-set the card by simply removing card from the rack power and re-inserting it after a few seconds.

It is safe to re-insert the card whilst the rack is powered

# 7 Specification

## General

| | |
|---|---|
| Dimensions | 100mm x 266mm module with DIN 41612 connector |
| Weight | 200g |
| Power consumption | 12 W |

## Inputs

| | |
|---|---|
| Video | HD or SD SDI 270Mb/s to 1.485Gb/s serial digital compliant to SMPTE 259M and SMPTE 292M<br>Cable equalisation >250m Belden 8281 or equivalent<br>HD (1.485Gb/s) – 100 metres<br>SD (270Mb/s) >250 metres |
| Return loss | -15dB for 50MHz to 1.5GHz |

## Outputs

| | |
|---|---|
| Number and type: | 3 reclocked SDI outputs 270Mb/s - 1.485Gb/s to SMPTE 259M and SMPTE 292M. Output follows input format<br>Belden 8281 or equivalent<br>HD (1.485Gb/s) – 100 metres<br>SD (270Mb/s) >250 metres |
| Jitter | Typically 0.2UI, 10Hz |
| Relay bypass | Input to main output (switched) |

## Processing

| | |
|---|---|
| Vertical data | Passes entire SDI stream, including HANC and VANC |
| GPIs | Four GPI inputs are available to provide 16 different recalls of delay time setting (seconds, frames, lines, pixels)<br>One GPI output is available: SDI input present |

ViViD HD-20

| | |
|---|---|
| Video store | 2 x 2GB |
| SD Delay | Adjustable in increments of 1 pixel (74.074 ns), lines, frames or seconds to a maximum of 119 seconds<br>Minimum delay is less than 1 line |
| HD Delay | Adjustable in increments of 1 pixel (13.4 ns), lines, frames and seconds to a maximum of 21 seconds<br>Minimum delay is less than 1 line |

ViViD HD-40

| | |
|---|---|
| Video store | 2 x 4GB |
| SD Delay | Adjustable in increments of 1 pixel (74.074 ns), lines, frames or seconds to a maximum of 238 seconds |

| | |
|---|---|
| | Minimum delay is less than 1 line |
| HD Delay | Adjustable in increments of 1 pixel (13.4 ns), lines, frames and seconds to a maximum of 43 seconds<br>Minimum delay is less than 1 line |